-TICN
H-WWK
H-WWXK
AH-WWK
AH-WWXK

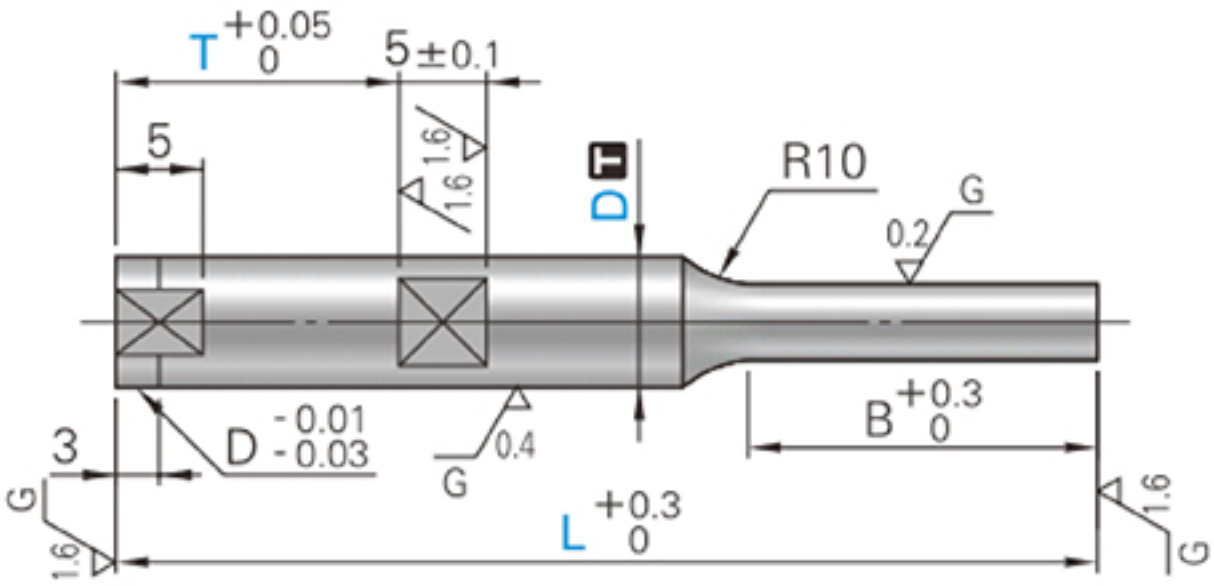

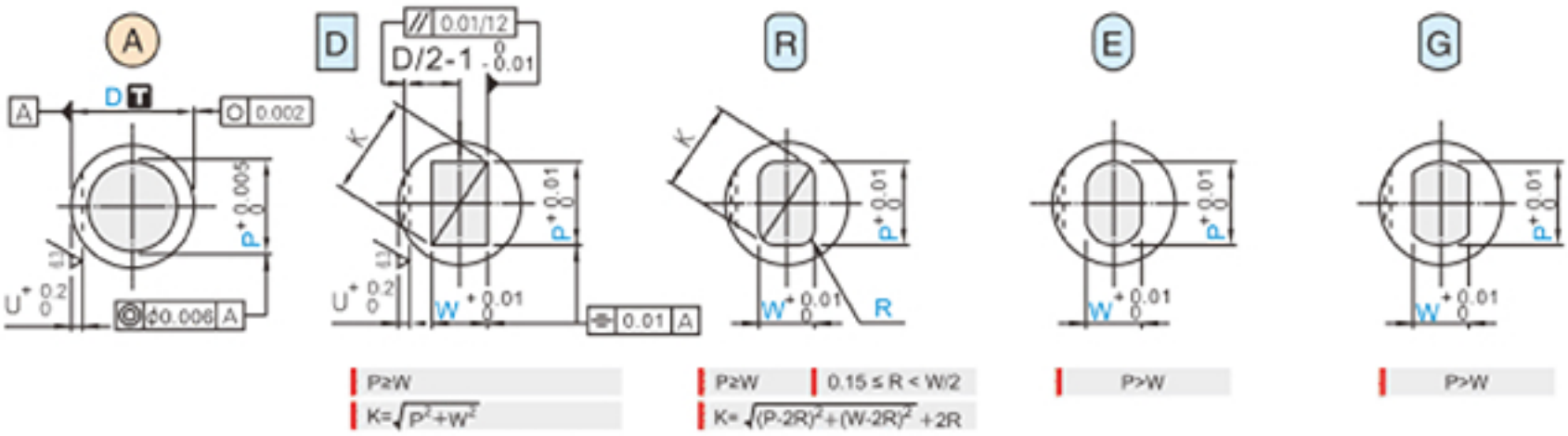

D T m5 +0.005 0

T	M	H	Type TiCN 3000HV		Catalog No. (B) (L>S)
D m5	V30(HIP) (HIP)	88~89HRA 90~92HRA	H-WWK H-WWXK	A D R E G	S L
D +0.005 0	V30(HIP) 子(HIP)	88~89HRA 90~92HRA	AH-WWK AH-WWXK		

ORDER	Catalog No.	-	L	-	P	-	W	-	R (R)	-	T
	H-WWKAS 8	-	70	-	P6.500					-	T20

T=L。

Catalog No. Type			D	L	Ⓐ P	Ⓓ Ⓔ Ⓡ Ⓖ P·Kmax.	P·Wmin.	Ⓡ R	T	B	U
(D m5) H-WWK H-WWXK (D3~6) ($D^{+0.005}_{0}$) AH-WWK AH-WWXK (D3~6)	Ⓐ Ⓓ Ⓡ Ⓔ Ⓖ	S	3	40 · 50 · 60 · 70	1.00~ 2.99	—	—	0.15 ~ W/2 以下 仅Ⓡ	T ≥ 5.0	8	0.5
			4		1.00~ 3.99	3.97	1.50				
			5		2.00~ 4.99	4.97	1.50				
			6		2.00~ 5.99	5.97	1.50				1.0
			8	(40) · 50 · 60 · 70 · 80	3.00~ 7.99	7.97	2.00			13	1.5
			10		3.00~ 9.99	9.97	2.50				
			13		6.00~12.99	12.97	3.00				
			16		10.00~15.99	15.97	4.00			19	
		L	3	50 · 60	1.00~ 2.99	—	—			13	0.5
			4	50 · 60 · 70	1.00~ 3.99	3.97	2.00				
			5		2.00~ 4.99	4.97	2.00				
			6		2.00~ 5.99	5.97	2.00				1.0
			8	50 · 60 · 70 · 80	3.00~ 7.99	7.97	2.50			19	1.5
			10		3.00~ 9.99	9.97	2.50				
			13		6.00~12.99	12.97	3.00				
			16	60 · 70 · 80	10.00~15.99	15.97	4.00			25	

① L(40) ····B=8 T=L。

■ Coating punch feature:

1、TiCN-coated punches are PVD coatings for punches, which can improve the hardness and wear resistance of the cutting edge and increase the service life of the punches. It is the abbreviation of "Titanium carbonitride".

2、 It can correspond to the sheet material with tensile strength above 270MPA, and it is a material with higher strength that the punch can process.

■ Using Features :

1、It is widely Apply to mould manufacturing and processing industries.

2、You can choose SKD11, SKH51, powder high speed steel two or three base materials to deal with various stamping conditions

3、The diameter of the punch rod has two tolerances of m5 and 0~+0.005, which can correspond to different matching methods.